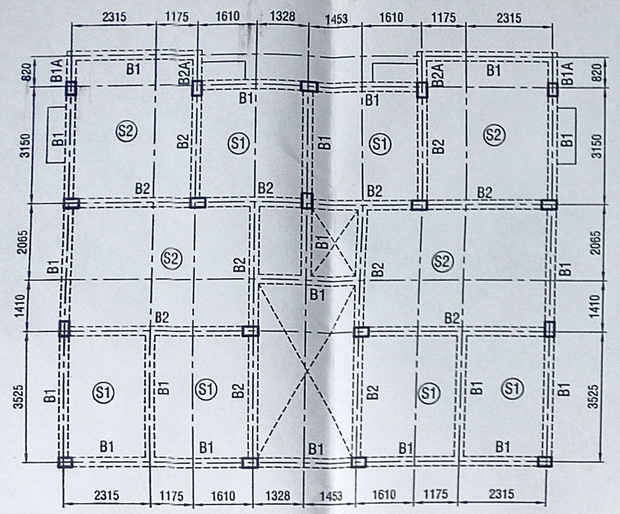


R.C.C. BEAM & SLAB LAYOUT PLAN

( 2ND,3RD & 4TH SLAB ) SCALE :- 1 : 100

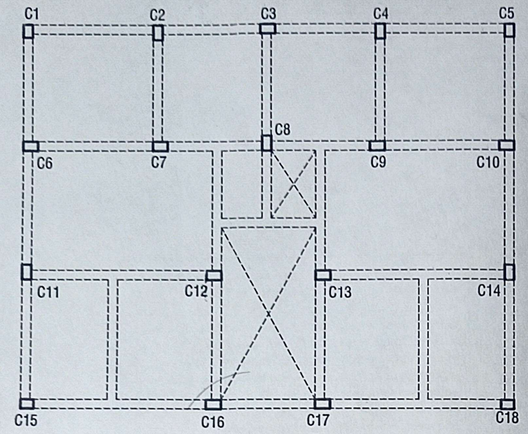


R.C.C. COLUMN LAYOUT PLAN

SACLE :- 1 : 100

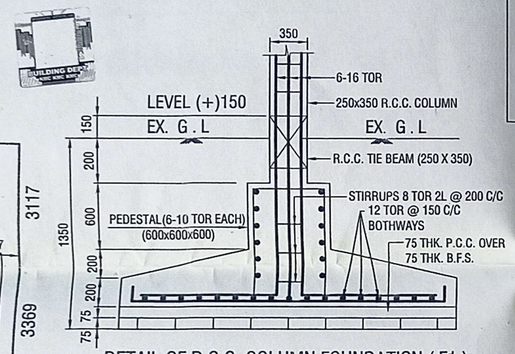


DETAIL OF R.C.C. COLUMN FOUNDATION ( F1 )

SCALE- 1 : 25

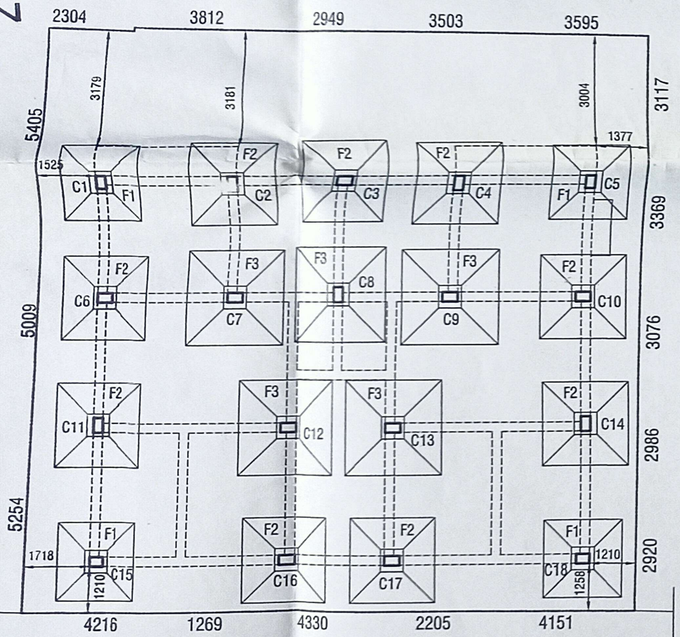


R.C.C. FOUNDATION & TIE BEAM LAYOUT PLAN

SCALE :- 1 : 100

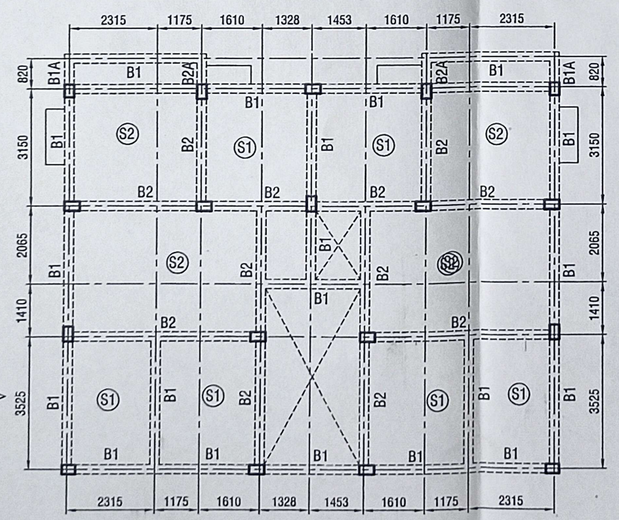


R.C.C. BEAM & SLAB LAYOUT PLAN

( 1ST SLAB ) SCALE :- 1 : 100

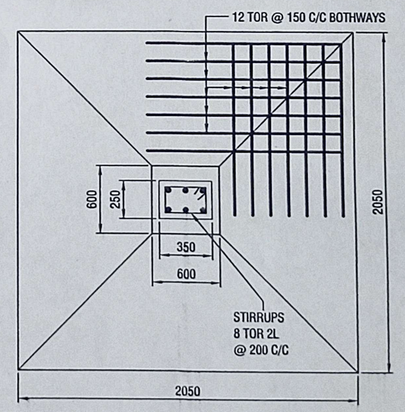


PLAN OF R. C. C. COLUMN FOUNDATION ( F1 )

SCALE- 1 : 25

## DECLARATION OF STRUCTURAL ENGINEER

THE STRUCTURAL DESIGN AND DRAWINGS OF BOTH FOUNDATION AND SUPER-STRUCTURE OF THE BUILDING HAS BEEN MADE BY ME CONSIDERING ALL POSSIBLE LOADS INCLUDING THE SEISMIC LOAD AS PER THE N.B.C OF INDIA AND CERTIFIED THAT IT IS SAFE AND STABLE IN ALL RESPECTS.

THE STRUCTURAL DESIGN HAVE BEEN DONE CONSIDERING THE SOIL INVESTIGATION REPORT PREPARED BY M A S
4, GARFA MAIN ROAD ,KOLKATA-75 AND SIGNED BY
KALLOL KUMAR. GHOSHAL, B.E.(CIVIL),MIE
K. M. C. EMPANELMENT NO. G.T./ II/ 14

**Suranjan Dutta**
B.E. CIVIL, MIE,CE,
KMC, E.S.E. Class-I/220
50A, East Road, Santoshpur
Kolkata-75

SIGNATURE OF E. S. E.
( SURANJAN DUTTA, E. S. E. NO. 220/I )

## DECLARATION OF GEO - TECHNICAL ENGINEER

UNDERSIGNED HAS INSPECTED THE SITE AND CARRIED OUT SOIL INVESTIGATION THEREON. IT IS CERTIFIED THAT THE EXISTING SOIL OF THE SITE IS ABLE TO CARRY THE LOAD COMMING FROM THE PROPOSED CONSTRUCTION AND THE FOUNDATION SYSTEM PROPOSED HEREIN IS SAFE & STABLE IN ALL RESPECT FROM GEO-TECHNICAL POINT OF VIEW.

<Kallol Kr Ghoshal>
Kallol Kr. Ghoshal, B.E.(Civil), MIE
Geo Technical Engineer
KMC Empanelment No. G.T./II/14

SIGNATURE OF GEO-TECHNICAL ENGINEER
( KALLOL KUMAR. GHOSHAL, B.E.(CIVIL),MIE
K. M. C. EMPANELMENT NO. G.T./ II/ 14 )

## SCHEDULE OF R. C. C. COLUMN FOUNDATION

| FOUNDATION MKD. | | SIZE OF FDN. SLAB (mmxmm) | DEPTH OF FDN. SLAB (mmxmm) | SIZE OF PEDESTAL / RIB BEAM | REINFORCEMENT |
|---|---|---|---|---|---|
| C1,C5,C15,C18 | F1 | 2050 x 2050 | 200 TO 400 | 600x600x600 EACH FACE 6-10 TOR | 12 TOR @ 150 C / C BOTHWAYS |
| C2,C3,C4,C6,C10, C11,C14,C16,C17 | F2 | 2250 x 2250 | 200 TO 400 | 600x600x600 EACH FACE 6-10 TOR | 12 TOR @ 125 C / C BOTHWAYS |
| C7,C8,C9,C12,C13 | F3 | 2550 x 2550 | 250 TO 450 | 600x600x600 EACH FACE 6-10 TOR | 12 TOR @ 100 C / C BOTHWAYS |

## SCHEDULE OF R. C. C. SLAB

| SLAB MKD. | SLAB THK. ( mm) | REINFORCEMENT ALONG SHORT SPAN | | REINFORCEMENT ALONG LONG SPAN | |
|---|---|---|---|---|---|
| | | MID. | END | MID. | END |
| S1 | 115 | 8 TOR @ 150 c/c | 8 TOR @ 300 c/c + 8 TOR @ 300 c/c | 8 TOR @ 150 c/c | 8 TOR @ 300 c/c + 8 TOR @ 300 c/c |
| S2 | 125 | 8 TOR @ 100 c/c | 8 TOR @ 200 c/c + 8 TOR @ 200 c/c | 8 TOR @ 100 c/c | 8 TOR @ 200 c/c + 8 TOR @ 200 c/c |

## SCHEDULE OF R. C. C. BEAMS & TIE- BEAMS

| BEAM MKD. | SIZE ( W X D ) ( mm x mm ) | REINFORCEMENT AT SUPPORT | | | REINFORCEMENT AT SPAN | | |
|---|---|---|---|---|---|---|---|
| | | LONG. REINFORCEMENT | | STIRRUPS & SPACING | LONG. REINFORCEMENT | | STIRRUPS & SPACING |
| | | TOP | BOTTOM | | TOP | BOTTOM | |
| B1 | 250x350 | 2-16 TOR+ 2-16 TOR | 2-16 TOR | 8 TOR 2L @ 200 c/c | 2-16 TOR | 2-16 TOR+ 2-16 TOR | 8 TOR 2L @ 200 c/c |
| B1A | 250x350 | 4-16 TOR+ 2-16 TOR | 2-16 TOR | 8 TOR 2L @ 200 c/c | - | - | - |
| B2 | 250x400 | 3-16 TOR+ 2-16 TOR | 3-16 TOR | 8 TOR 2L @ 200 c/c | 3-16 TOR | 3-16 TOR | 8 TOR 2L @ 200 c/c |
| B2A | 250x400 | 3-16 TOR+ 3-16 TOR | 3-16 TOR | 8 TOR 2L @ 200 c/c | - | - | - |
| TIE BEAM | 250x350 | 3-16 TOR | 3-16 TOR | 8 TOR 2L @ 200 c/c | 3-16 TOR | 3-16 TOR | 8 TOR 2L @ 200 c/c |

## SCHEDULE OF R. C. C. COLUMN

| COLUMN MKD. | COLM. SEC. AT (GR.+I) WITH REINFORCEMENT | COLM. SEC. AT (G+II) WITH REINFORCEMENT | COLM. SEC. AT (G+III) WITH REINFORCEMENT | LATERALS & SPACING |
|---|---|---|---|---|
| C1,C5,C15,C18 | 250x350 6-16 TOR | 250x350 6-16 TOR | 250x350 4-16 TOR+2-12 TOR | 8 TOR 2L @ 200 c/c |
| C2,C3,C4,C6,C10,C11, C14,C16,C17 | 250x400 8-16 TOR | 250x400 6-16 TOR+2-12 TOR | 250x400 8-16 TOR | 8 TOR 2L @ 200 c/c |
| C7,C8,C9,C12,C13 | 250x400 8-16 TOR | 250x400 8-16 TOR | 250x400 8-16 TOR | 8 TOR 2L @ 200 c/c |

## NOTES

1. ALL DIMENSION ARE IN MM. OTHERWISE MENTIONED.
2. FOLLOW WRITTEN DIMENSIONS ONLY.
3. BEARING CAPACITY OF SOIL AS PER SOIL TEST REPORT.
4. GRADE OF R.C. CONCRETE - M20.
5. GRADE OF STEEL Fe-415.
6. COLUMN NO. C8,C9,C12 & C13 DEPTH OF THE FOUNDATION 2.350 M. BOTTOM OF THE TIE BEAM LEVEL.

Sankar prasad Bhaumik.
Tridip Bhowmik

SRI SANKAR PRASAD BHAUMIK AND SRI TRIDIP BHOWMIK, CONSTITUTED ATTORNEY OF (1) MRS. MOHUA GHOSH (2) MRS. ABHRADIPA MITRA (3) MRS. SUBHRADIPA KAR (4) MRS. RATNADIPA SEN

SIGNATURE OF OWNER / C.A
SRI. SANKAR PRASAD BHAUMIK &
SRI TRIDIP BHOWMIK BOTH
PARTNERS OF M/S STHAPATI CONSTRUCTION, C/A OF
(A) MOHUA GHOSH (B) ABHRADIPA MITRA
(C) SUBHRADIPA KAR & (D) RATNADIPA SEN

**Samir Kumar Dutta**
L.B.S. Class-I/1303
114C/1 Garfa Main Road
Kolkata-75

SIGNATURE OF L. B. S.
( SAMIR KUMAR DUTTA, L. B. S. NO. - 1303/I )

SCALE- 1:100 & 1:25

SHEET : - 2

STRUCTURAL PLAN OF PROPOSED G+III STORIED RESIDENTIAL BUILDING U/S - 393A OF K.M.C ACT. 1980 AND K.M.C B/R 2009, OF R.S DAG NO- 815, R.S KHATIAN NO- 83, J.L NO -22 , MOUZA NO- SANTOSHPUR AND BUILDING HEIGHT OF 12.200 M, AT PREMISES NO.- 130, PURBA DIGANTA IN WARD NO.- 109, BOROUGH NO.- XII, KOLKATA - 700 075, P.S.- SURVEY PARK .